RANGE DIAGRAM
- FULLY EXTENDED OUTRIGGER CONFIGURATION -

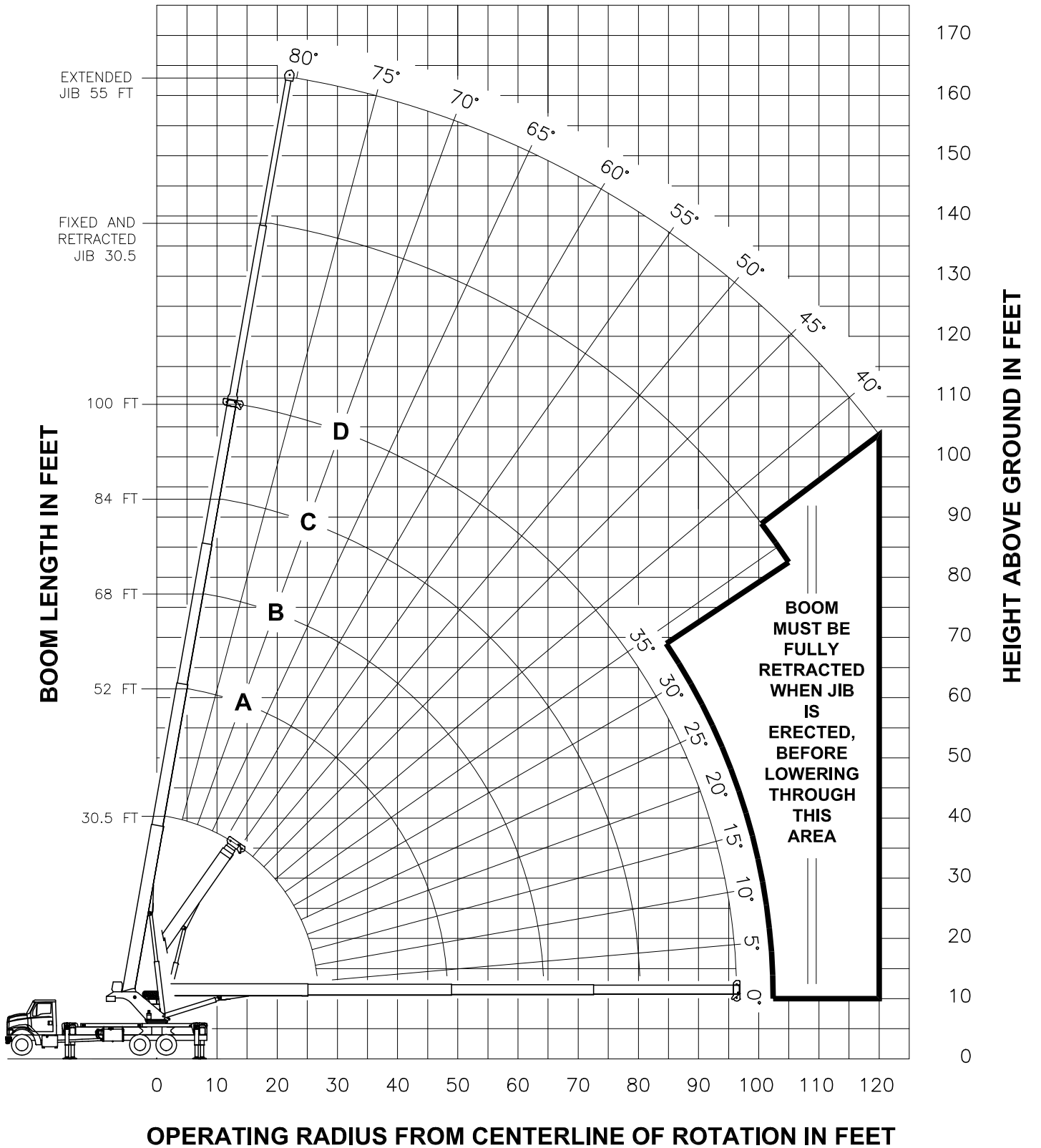

USE THIS CHART ONLY WHEN ALL OUTRIGGERS ARE FULLY EXTENDED

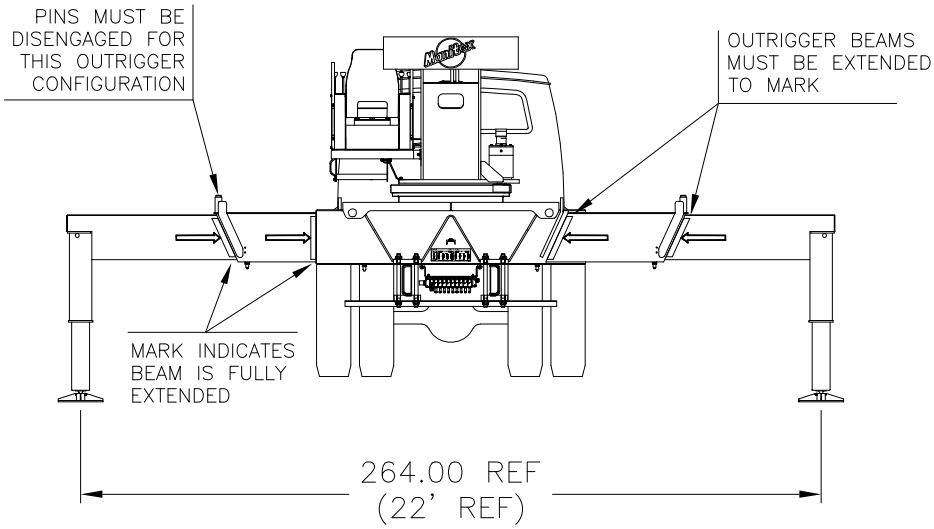

- FULLY EXTENDED OUTRIGGER CONFIGURATION -

LOAD RATINGS IN LBS WITH ALL OUTRIGGERS FULLY EXTENDED
LMI CODE #1

OPERATING RADIUS FT	LOADED BOOM ANGLE	BOOM LENGTH AND MARKER	A		B		C		D	
	∠	30.5 FT	∠	52 FT	∠	68 FT	∠	84 FT	∠	100 FT
5	74	80000								
8	68	61000								
10	64	52860	76	31500						
12	60	47000	73	31500	78	31500				
15	53	40280	70	31500	76	31500	79	23700		
20	40	30660	64	28680	71	26820	76	20600	79	14000
25	20	22380	58	23230	67	22160	72	18300	76	13500
30			51	17230	62	17450	69	15870	73	12820
35			43	13370	57	13590	65	13720	70	11380
40			34	10660	52	10910	61	11030	67	10160
45			22	8440	46	8710	57	8850	64	8940
50					39	7060	52	7200	60	7290
55					32	5790	48	5930	57	6010
60					22	4760	43	4910	53	4990
65							37	4080	49	4160
70							31	3390	45	3470
75							22	2800	40	2890
80							7	2280	35	2390
85									30	1960
90									22	1580
95									11	1230
100										
105										
110										
115										
120										
	590 LBS		350 LBS		270 LBS		220 LBS		180 LBS	
	890 LBS		530 LBS		400 LBS		330 LBS		280 LBS	

JIB LOAD RATINGS IN LBS
WITH ALL OUTRIGGERS FULLY EXTENDED

OPERATING RADIUS FT	FIXED JIB LMI CODE #2 LOADED BOOM ANG	FIXED JIB LMI CODE #2 JIB LENGTH FOR ALL BOOM LENGTHS SEE WARNING NOTE 4	TELESCOPIC JIB LMI CODE #3 LOADED BOOM ANG	TELESCOPIC JIB LMI CODE #3 JIB LENGTH FOR ALL BOOM LENGTHS SEE WARNING NOTE 4	TELESCOPIC JIB LMI CODE #4 LOADED BOOM ANG	TELESCOPIC JIB LMI CODE #4 JIB LENGTH FOR ALL BOOM LENGTHS SEE WARNING NOTE 4
	∠	30.5 FT	∠	30.5 FT	∠	55 FT
10						
12						
15						
20						
25						
30	77	7300	77	7000		
35	75	7100	75	6800	78	4000
40	73	6620	73	6240	76	3850
45	71	6060	71	5670	74	3700
50	69	5550	69	5150	73	3550
55	66	5100	66	4690	71	3310
60	64	4680	64	4210	69	3090
65	61	4210	61	3740	67	2900
70	59	3800	59	3330	65	2710
75	56	3200	56	2800	63	2550
80	53	2690	53	2290	61	2400
85	50	2250	50	1850	59	2270
90	47	1870	47	1460	56	2080
95	43	1530	43	1120	54	1820
100	40	1230	40	820	52	1510
105	36	960	36	550	49	1240
110					46	990
115					43	770
120					40	560
	FIXED		DEDUCTIONS FOR STOWED JIBS			
	TELESCOPIC					